CHAMPION®

AS-40 | 觸控型檯下式洗杯機

TOUCH PANEL UNDER COUNTER GLASS-WASHER

AS-40

產品描述
Product Description

CHAMPION AS-40 觸控型檯下式洗杯機，搭載多項專利技術，提供符合國際標準的高效清潔效能，助您輕鬆應對繁忙清洗需求，為現代餐飲業實現最大成本效益。

The CHAMPION AS-40 Touch Panel is an under-counter glass-washer featuring multiple patented technologies, offering high cleaning efficiency that meets international standards. It optimises cost-effectiveness for the modern food and beverage industry.

創新技術 · 簡易操作 · 效益倍增
Innovative Technology with Easy Operation for Multiplied Efficiency

為什麼選擇 AS-40 ?
Why to choose AS-40 ?

省空間 Space Efficiency : 適合放置於受地方面積所限制的環境，只需2分鐘完成清洗程序，以有限的空間發揮最大的營運效能
Ideal for areas with limited space and it takes only 2 minutes to complete a cleaning cycle, delivering maximum operational efficiency in a small footprint

省時高效 Time-Efficient & Productive : 觸控式介面設計，可最大幅降低培訓成本，優化營運效率
Touch panel design minimises training requirements and optimises operational efficiency

省心力 Peace of Mind : 原廠保養及售後維護，確保及時全面的技術及零件支援
Genuine warranty coverage ensures timely and comprehensive technical and parts after-sales services and support

創新技術 • 提升效能

Cutting-edge Technology • Enhanced Cost Effectiveness

CHAMP-BOX™無觸式繼電器

抗濕氣設計，穩定耐用，避免傳統繼電器因氧化導致接觸不良，在極端環境中仍能穩定工作

CHAMP-BOX™ Contactless Relay

Humidity-resistant design for stability and durability. Prevents oxidation-related contact failure, ensuring reliable operation in extreme environments

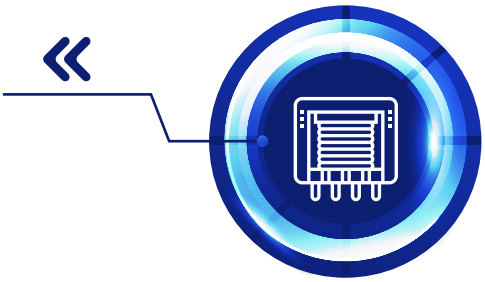

CHAMP-X™活塞脈衝陶瓷智能分配器

採用油井抽取原油的往復式活塞泵技術，並以高硬度的氧化鋯陶瓷作為主材，實現0.1ml精準分配，大幅降低清潔劑浪費，輕鬆維持穩定高效的清洗效果，壽命高達10年

CHAMP-X™ Smart Pulsed Signal Injector

Utilises reciprocating piston pump technology commonly used in oil well extraction, with high-hardness zirconia ceramic. Delivers precise 0.1ml dispensing, significantly reducing detergent waste while maintaining efficient cleaning results, with a lifespan of up to 10 years

瀞研™大氣壓傳感液位儀

採用大氣壓力計算水位高度，精準控制水位及減少水質干擾，以及提供信號感測換水密度，以便監察衛生操作程序

CleanNovation™Atmos Sensor

Using atmospheric pressure to calculate water level height, it enables precise water level control and minimises water quality interference. Additionally, it provides signal sensing for changes in water density, ensuring effective monitoring of sanitary operating procedures

觸控型檯下式洗杯機 AS-40
Touch Panel Under Counter Glass-washer

CHAMPION®

高效清潔 • 衛生保障
High Cleaning Efficiency • Hygiene Assurance

360˚立體噴淋
360° Stereo Rinsing System
▶ 上下雙噴臂搭配特殊噴嘴，徹底清除頑固污漬，全方位確保清潔效果
Dual spray arms (top and bottom) paired with specialised nozzles thoroughly remove stubborn stains, ensuring complete cleaning coverage

多重洗滌模式
Multiple Washing Modes
▶ 標準模式、重污模式及除垢程序，靈活應對多樣化需求
Includes standard, heavy stain, and descaling modes, offering flexible solutions to meet diverse needs

卓越設計功能
AS-40 Excellent Design

體積小巧 高效清洗

專為狹小空間設計，僅需2分鐘即可完成整個清洗程序，實現空間效能最大化

Compact in Size Without Compromising Cleaning Efficiency

It is designed for tight spaces, completing the entire cleaning cycle in just 2 minutes to maximise space efficiency

內嵌式機門 方便操作

一體化機門設計，騰出更多工作空間；簡易控制版面，任何員工都能輕鬆應付

Embedded Design for Easy Operation

Integrated door design free up more workspace, whereas simple control panel enabling readiness to use for every staff

雙重濾網 全方位清洗

雙重濾網，加強阻隔食物殘渣能力，減低噴孔阻塞機會同時方便進行內部清潔，提升洗滌效果

Double Filters for All-Round Cleaning

Double filters enhance the ability to block food residues, reduce the risk of nozzle blockage, and facilitate easy cleaning, thereby improving cleaning efficiency

只需13 Amp供電

更低供電需求，靈活配合您的營運環境與資源調配

Only 13 Amp Power

Lower energy needs for flexible integration with your operational needs and resources allocations

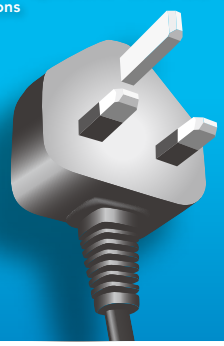

HACCP 國際認證

清洗程序符合HACCP食品安全標準，確保餐具衛生，讓客人享受安全無憂的用餐體驗

HACCP Certification

The cleaning procedures comply with HACCP Food Safety Program, ensuring clean tableware and providing customers with extraordinary dining experience

環保清潔劑

搭配原廠並獲中國環境標誌產品認證清潔劑

CEC2024ELP00325903

Eco-friendly Cleaning Detergents

Compatible with China Environmental Labelling Certified genuine cleaning detergents

觸控型檯下式洗杯機 AS-40
Touch Panel Under Counter Glass-washer

CHAMPION®

透視圖 Perspective

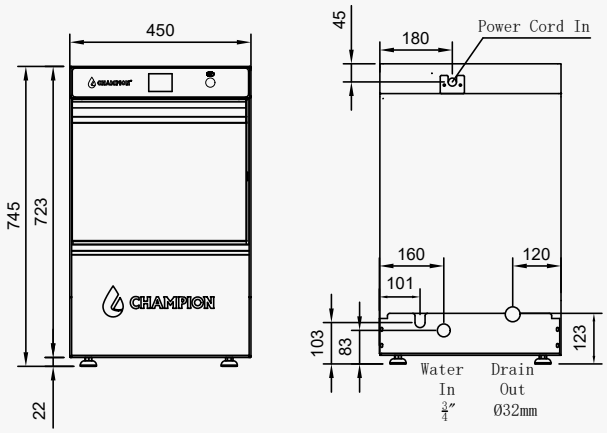

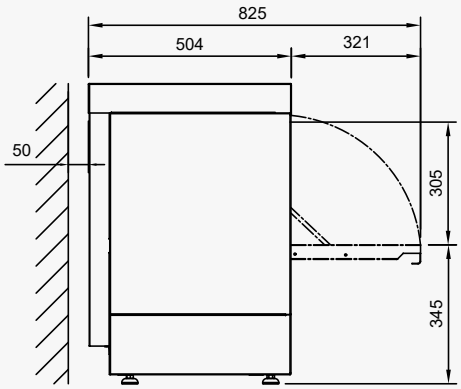

運作圖 Operation Diagram

標準式運作圖
Standard Type Operation

技術規格 Technical Data

洗滌時間 Cycle Time	2 Mins
最大洗滌量 Maximum Capacity	30 Racks / Hour
用水量 Water Consumption	1.2 L / Rack
水缸 Wash Tank	16 L
主洗水缸加熱功率 Tank Heat	2 kW
熱水爐功率 Booster	2 kW
主洗水泵馬達功率 Wash Pump	0.25 kW
總功率 Total Loading	2.3 kW (10.5 Amp)
尺寸 Loading Size	450 (W) x 504 (D) x 745 (H) mm
最高洗滌高度 Loading Height	310 mm
重量 Weight	50 kg

安裝和連接要求 Installation and Connection Requirements

供水管 Supply Hose	3/4"
水壓 Water Pressure	8 – 15 psi
排水管 Drain Hose	OD 40 mm
供電 Power Supply	220 V / 50 Hz / 1 / N / PE / 13 A (防水隔離開關 Weatherproof Isolator)
電源線 Power Cord	1.5 mm^2

選項和配件 Options and Accessories

洗碗碟機專用篩 Dishwasher Rack	400 x 400 mm

售後服務才是我們的開始
After-Sales Service is Where Our Business Begins

預防性檢查
Preventive Inspections

衛生諮詢及培訓
Hygiene Consultation and Training

原廠保養
Genuine Warranty Service

流動工程車隊
Engineering motorcade

全面售後支援
Comprehensive After-sales Support

CHAMPION®

We Make · We Care　我創造 · 我重視

V2.25.4.3.AS40

(852) 2475 9875　www.champion-chem.com　enquiry_hk@champion-chem.com